REVISIONS				
RevNo	Description	Date	Revised By	Approv.

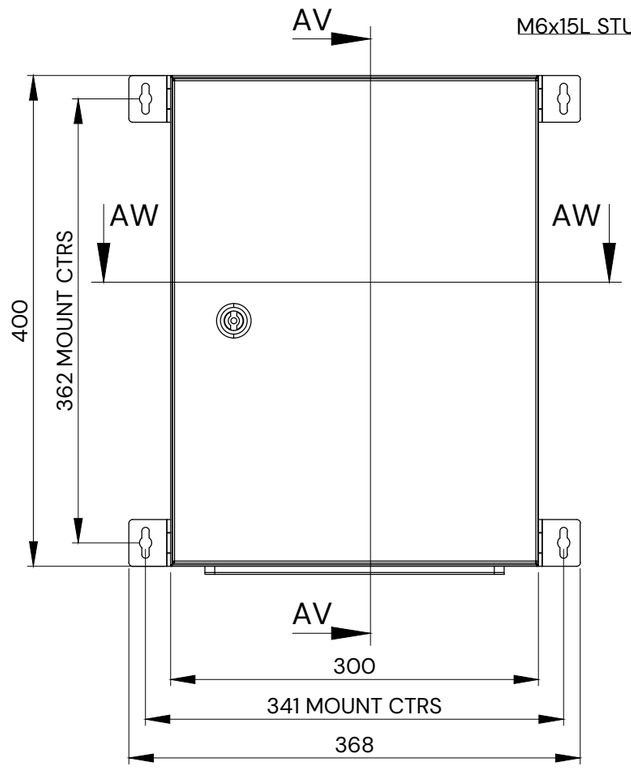

FRONT VIEW

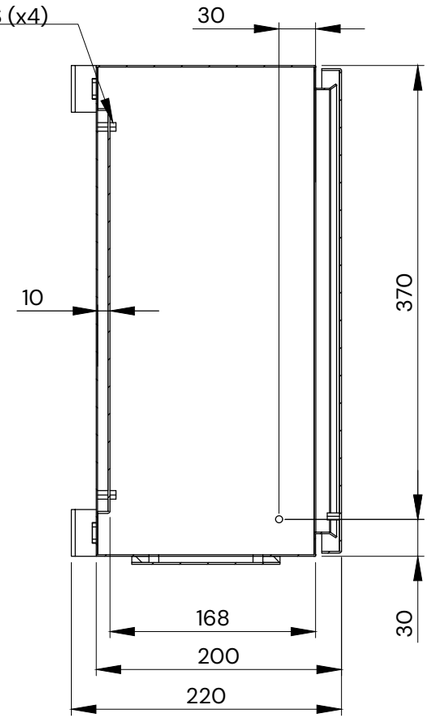

SECTION AV-AV

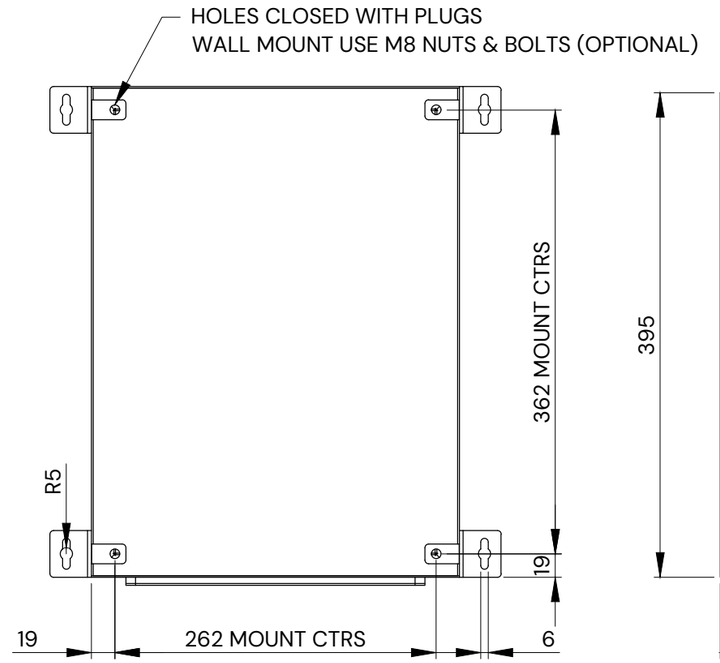

REAR VIEW

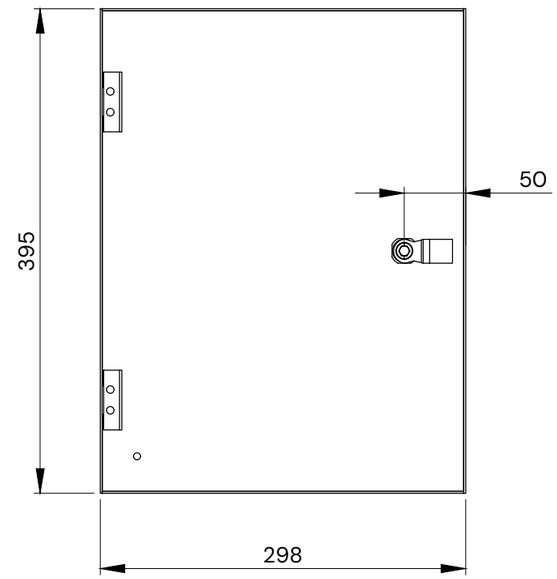

INSIDE DOOR VIEW

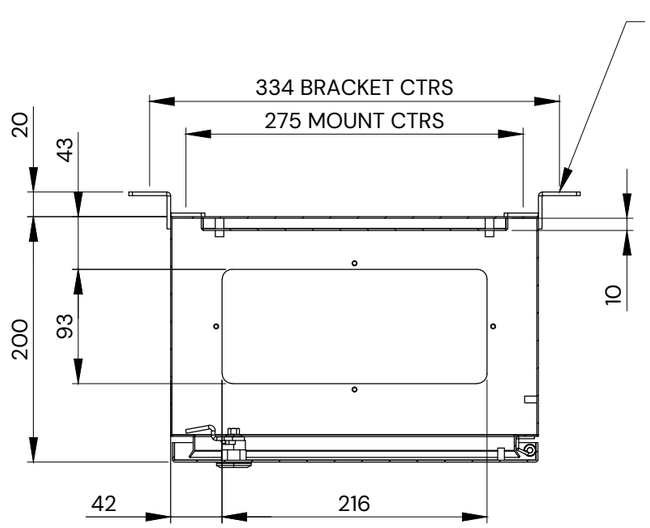

SECTION AW-AW

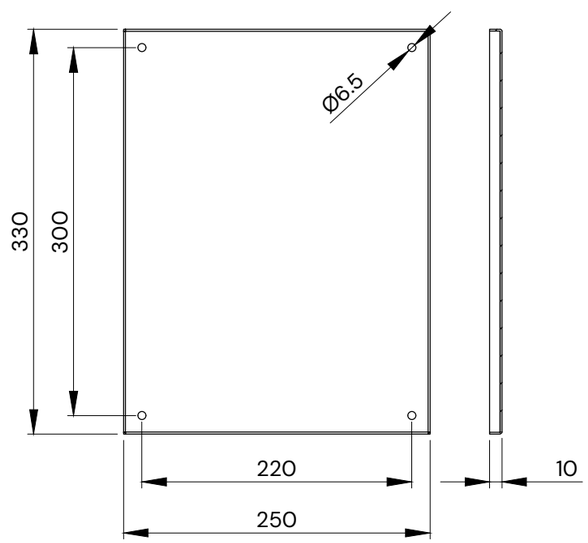

DEVICE MOUNTING PLATE

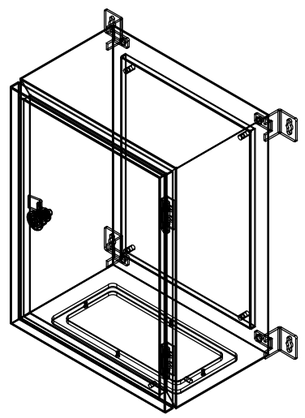

BODY:	1.2mm ELECTRO-GALVANISED STEEL
DOOR:	1.5mm ELECTRO-GALVANISED STEEL
MOUNTING PLATE:	1.5mm ELECTRO-GALVANISED STEEL
GLAND PLATE:	1.5mm ELECTRO-GALVANISED STEEL
SEAL:	POLYURETHANE
SURFACE TREATMENT:	POWDER-COAT 80-120 micron
COLOUR:	RAL7035
MASS:	7 Kg.
PROTECTION:	IP66 IK10
STANDARD:	IEC/EN 60529, IEC/EN 62208

NOTES:

WALL MOUNTING BRACKETS ARE NOT INCLUDED AND SHOULD BE ORDERED SEPARATELY.

UNLESS OTHERWISE SPECIFIED, ALL DIMENSIONS ARE IN MILLIMETERS.

VERSCH

DRAWING TITLE:	FILE NAME:
400H x 300W x 200D IP66 ELECTRICAL ENCLOSURE RAL7035	VE-403020

DRAWN BY:	JJ	02/12/2025	SIZE	DRAWING NO:	VE-403020	REV NO.
CHECKED BY:	LR	02/12/2025	A3	SCALE:	1:5	00
APPROVED BY:	LR	02/12/2025		DO NOT SCALE	SHEET 1 OF 1	